Fig. 88-H (New 08/12)

TRAILERS, M1000 HET—FLATCAR WITH CHAIN TIE-DOWN ASSEMBLY AND CUSHION DEVICE

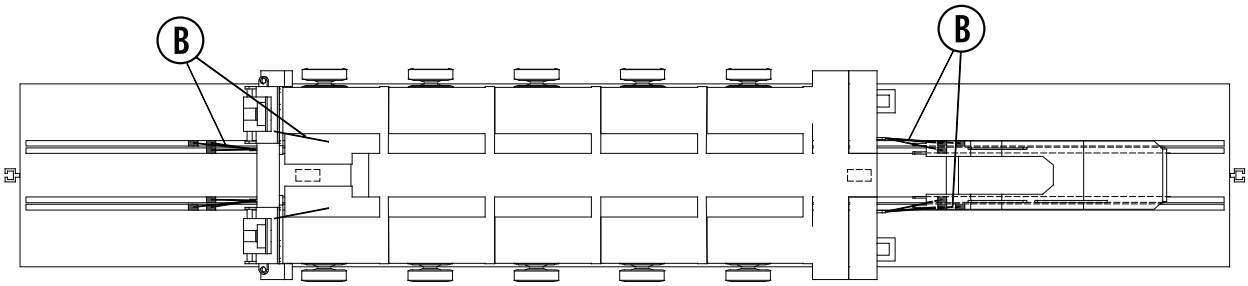

TOP VIEW

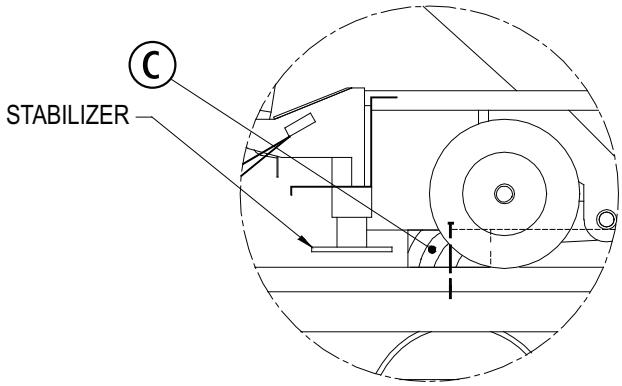

SKETCH 1

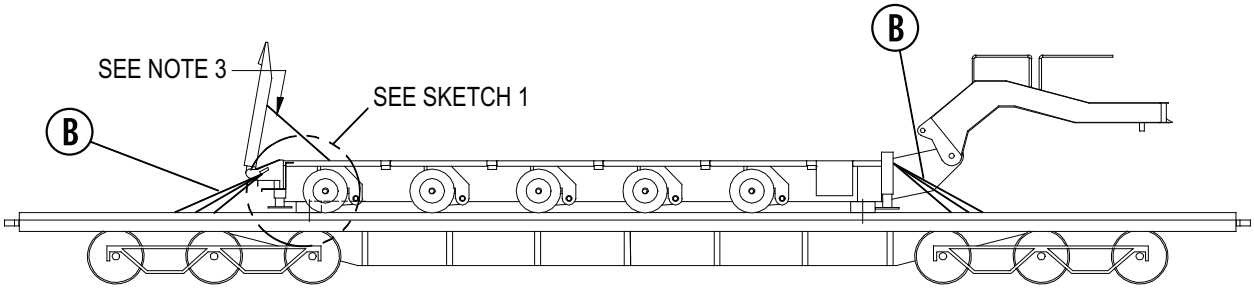

SIDE VIEW

Item	No. of Pcs.	Description
A		Vacant
B	12 each.	Chains: ½-in. alloy, 55,000 lb MBS.
C	1 each per end.	Block: hardwood, 8 in. × 8 in. × 16 in. long, locate at the centerline of the railcar. One block required at each end as shown in Sketch 1; toenail on wood railcar decks before loading trailer.

Notes and Additional Requirements:

1. Stabilizers must not contact railcar.
2. Lower trailer frame onto Item C.
3. Use chains on the trailer to secure the end ramps.

Reference the General Rules in Section No. 1 of the *Open Top Loading Rules Manual* for additional details.

Fig. 88-I (Rev 12/15)
(New 08/13)

TRACTORS, TRUCK, HEAVY, 36,500 LB OR LESS, SECURED WITH CHAINS—FLATCARS

Item	No. of Pcs.	Description
A		Brake wheel clearance: see General Rule 2 in Section 1.
B	12 each unit.	Alloy steel chain: 1/2-in. diameter, extra strength, minimum breaking strength of 55,000 lb, for vehicles weighing up to 36,500 lb.

Notes and Additional Requirements:

1. Shippers should specify cars equipped with tie-down devices in the quantity shown in Item B when ordering specialized railway equipment. When necessary to use cars that do not have built-in chains and tensioning devices, chains and turnbuckles of appropriate size and strength may be used to secure vehicles. Load binders may not be used in lieu of turnbuckles to tension tie-down chains.
2. Vehicles must face in the same direction and be uniformly spaced the length of car to allow sufficient space at each end of the car and between vehicles for securement. Apply tie-downs parallel to each other at the same end of the vehicle and from the vehicle tie-down point to the car tie-down facility. Angle of tie-downs must be as close to 30° as possible.
3. Tie-down chains must be free from twisted or kinked links prior to their application to the vehicle.
4. Transmission shall be in neutral. Set the parking brake (if it is available and operational) to prevent the vehicle from inadvertently moving during the securement and unloading processes.
5. Vehicles equipped with air suspensions shall have the suspensions bled prior to application of chains to restrain the vehicle properly for transport. This is done to prevent air suspensions from leaking and losing pressure, causing the vehicle to lower significantly in transit and introduce an unsafe amount of chain slack.
6. Vehicles that have a mix of spring suspensions and air suspensions may leave the air suspension intact as long as there is at least one axle with a spring suspension on the front and back of the vehicle.
7. On HTTX-type chain assemblies, the open hook part of the double adjustable grab hook must be secured with wire or a nylon wire tie to prevent the hook from becoming disengaged from the chain link to which it is secured. On DODX-type chain assemblies, neither the claw hook at the base of the chain nor the slip hook engaging the shackle or tie-down provision on the vehicle needs to be secured with wire or nylon tie wrap.
8. Turnbuckles used to tighten chains must be wired or locked to prevent them from turning during transit unless the turnbuckles are equipped with self-locking devices.

IMPLEMENTED 12/2015

Fig. 88-I (Rev 12/15) (Concluded)
(New 08/13)

TRACTORS, TRUCK, HEAVY, 36,500 LB OR LESS, SECURED WITH CHAINS—FLATCARS

Item	No. of Pcs.	Description

Notes and Additional Requirements (concluded):

9. When vehicles are shipped in a loaded configuration, the gross weight of the vehicle and cargo combined must be determined in order to ensure that the proper size and/or number of tie-downs are used to secure vehicles to the railcar.
10. Vehicles with rotating parts, if not equipped with a workable external locking device, must have the rotating portion secured to the body with two 3/8 in. 6 × 19 IWRC IPS wire rope, doubled (complete loop), one each side of vehicle. Protection must be applied at tie-down points when sharp edges are present. Secure each with two cable clips. Substitution of wire or banding is not authorized.

Reference the General Rules in Section No. 1 of the *Open Top Loading Rules Manual* for additional details.

IMPLEMENTED 12/2015

Fig. 88-J (New 11/14)

TRAILER, M870A2E1, 24,500 LB OR LESS—FLATCARS, 60 FT LONG

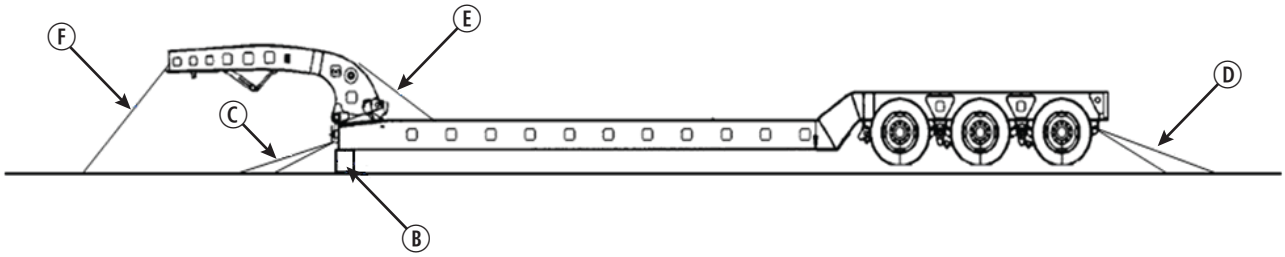

Item	No. of Pcs.	Description
A		Brake wheel clearance: see General Rule 2 in Section 1.
B	1	Lumber (hardwood): 8 in. × 8 in. × 120 in. Locate between front of trailer and car.
C	4	Chains: ½-in. diameter alloy, 55,000 lb minimum breaking strength
D	4	Chains: ½-in. diameter alloy, 55,000 lb minimum breaking strength
E	2	Chains: ½-in. diameter, supplied on trailer
F	2	Chains: ½-in. diameter alloy, 55,000 lb minimum breaking strength

Notes and Additional Requirements:

1. When ordering railway equipment, shippers should specify HTTX or OTTX cars. DODX-series cars have chain assemblies that are not compatible with trailer front tie-down provisions.
2. Use chains on trailer (Item E) to secure gooseneck to tie-downs on trailer deck.

Reference the General Rules in Section No. 1 of the *Open Top Loading Rules Manual* for additional details.