Fig. 88-A (Rev. 07/07)
(New 10/66)

Archived 02/2015

VEHICLES, INCLUDING CUCV, (SINGLE OR DUAL WHEELS), TWO OR THREE AXLE—FLATCARS, WITH WOOD FLOORS

Fig. 88-B (Rev. 12/15)
(New 10/68)

MILITARY VEHICLES, PNEUMATIC TIRES, NON-ARTICULATED, 75,850 LB OR LESS, SECURED WITH CHAINS—FLATCARS

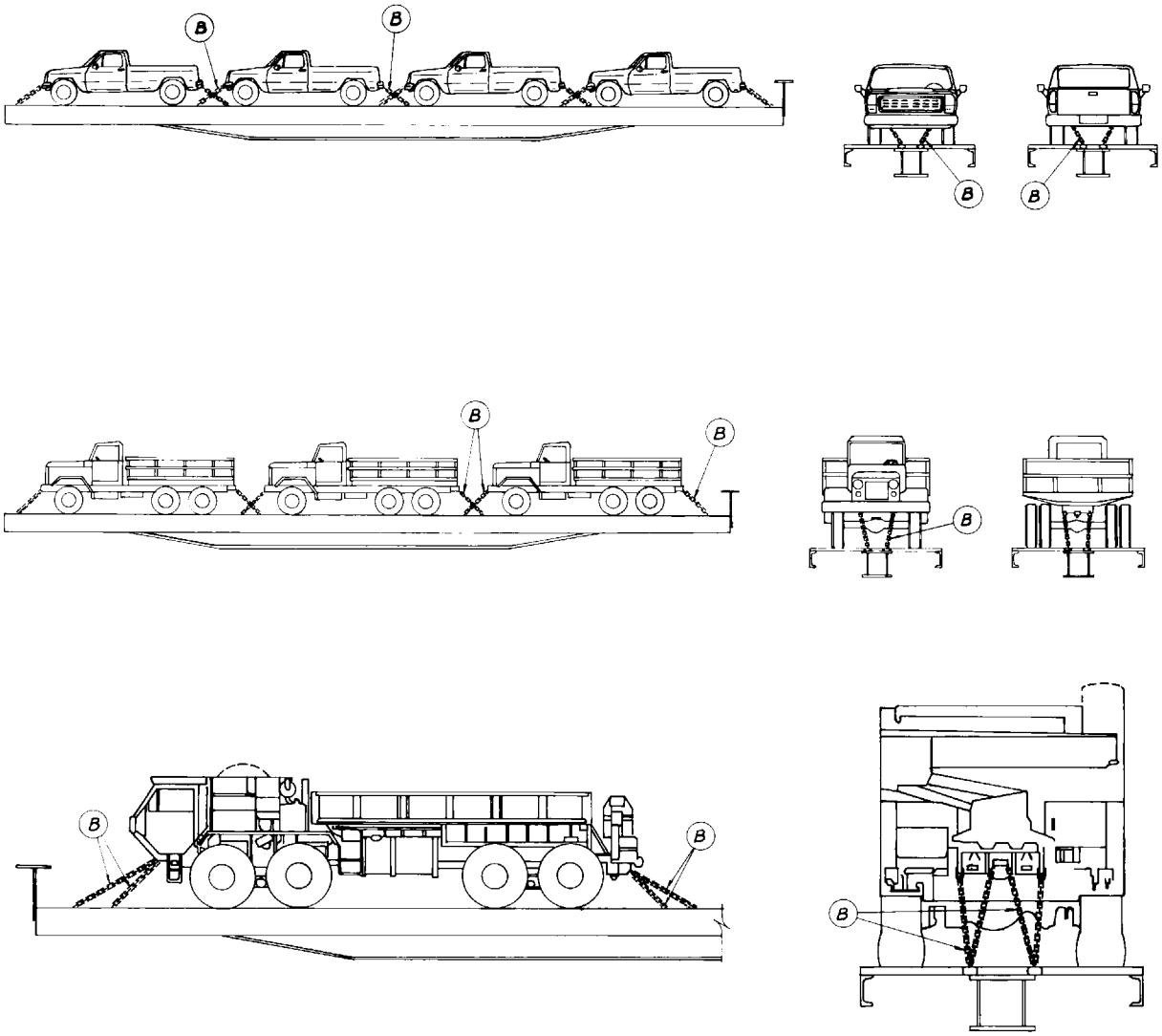

Item	No. of Pcs.	Description
A		Brake wheel clearance: see General Rule 2 in Section 1.
B	4 each unit.	Alloy steel chain: 3/8-in. diameter, extra strength, minimum breaking strength of 27,000 lb, for vehicles weighing 12,400 lb or less.
	8 each unit.	Alloy steel chain: 3/8-in. diameter, extra strength, minimum breaking strength of 27,000 lb, for vehicles weighing over 12,400 lb to 24,800 lb, inclusive.
	12 each unit.	Alloy steel chain: 3/8-in. diameter, extra strength, minimum breaking strength of 27,000 lb, for vehicles weighing over 24,800 lb to 40,000 lb, inclusive.
	4 each unit.	Alloy steel chain: 1/2-in. diameter, minimum breaking strength of 45,000 lb, for vehicles weighing over 20,650 lb or less. Alloy steel chain: 1/2-in. diameter, extra strength, minimum breaking strength of 55,000 lb, for vehicles weighing 25,250 lb or less.
	8 each unit.	Alloy steel chain: 1/2-in. diameter, extra strength, minimum breaking strength of 55,000 lb, for vehicles weighing 25,250 to 50,550 lb, inclusive.
	12 each unit.	Alloy steel chain: 1/2-in. diameter, extra strength, minimum breaking strength of 55,000 lb, for vehicles weighing over 50,550 lb to 75,850 lb, inclusive.

IMPLEMENTED 12/2015

Fig. 88-B (Rev. 12/15) (Concluded)
(New 10/68)

MILITARY VEHICLES, PNEUMATIC TIRES, NON-ARTICULATED, 75,850 LB OR LESS, SECURED WITH CHAINS—FLATCARS

Notes and Additional Requirements:

1. Shippers should specify cars equipped with tie-down devices in the quantity shown in Item B when ordering specialized railway equipment. When necessary to use cars that do not have built-in chains and tensioning devices, chains and turnbuckles of appropriate size and strength may be used to secure vehicles. Load binders may not be used in lieu of turnbuckles to tension tie-down chains.
2. Vehicles must face in the same direction and be uniformly spaced the length of car to allow sufficient space at each end of the car and between vehicles for securement. Apply tie-downs parallel to each other at the same end of the vehicle and from the vehicle tie-down point to the car tie-down facility. Angle of tie-downs must be as close to 45° as possible.
3. Tie-down chains must be free from twisted or kinked links prior to their application to the vehicle.
4. Transmission shall be in neutral. Set the parking brake (if it is available and operational) to prevent the vehicle from inadvertently moving during the securement and unloading processes.
5. Vehicles equipped with air suspensions shall have the suspensions bled prior to application of chains to restrain the vehicle properly for transport. This is done to prevent air suspensions from leaking and losing pressure, causing the vehicle to lower significantly in transit and introduce an unsafe amount of chain slack.
6. Vehicles that have a mix of spring suspensions and air suspensions may leave the air suspension intact as long as there is at least one axle with a spring suspension on the front and back of the vehicle.
7. On HTTX-type chain assemblies, the open hook part of the double adjustable grab hook must be secured with wire or a nylon wire tie to prevent the hook from becoming disengaged from the chain link to which it is secured. On DODX-type chain assemblies, neither the claw hook at the base of the chain nor the slip hook engaging the shackle or tie-down provision on the vehicle needs to be secured with wire or nylon tie wrap.
8. Turnbuckles used to tighten chains must be wired or locked to prevent them from turning during transit unless the turnbuckles are equipped with self-locking devices.
9. When vehicles are shipped in a loaded configuration, the gross weight of the vehicle and cargo combined must be determined in order to ensure that the proper size and/or number of tie-downs are used to secure vehicles to the railcar.
10. Commercial Utility Cargo Vehicles (CUCV), when loaded with material, must be secured on flatcars equipped with cushioning devices.
11. Vehicles with rotating parts, if not equipped with a workable external locking device, must have the rotating portion secured to the body with two 3/8 in. 6 × 19 IWRC IPS wire rope, doubled (complete loop), one each side of vehicle. Protection must be applied at tie-down points when sharp edges are present. Secure each with two cable clips. Substitution of wire or banding is not authorized.
12. The restraint requirements of this figure are not adequate for light armored vehicles (LAV). See Figure 58-B.

Reference the General Rules in Section No. 1 of the *Open Top Loading Rules Manual* for additional details.

IMPLEMENTED 12/2015

Fig. 88-C (Rev 02/12)
(New 9/96)

PALLETIZED LOAD SYSTEM (PLS), TRUCKS AND TRAILERS, 95,000 LB OR LESS PER COMBINED VEHICLE—FLATCARS, HTTX OR SIMILAR TYPE, EQUIPPED WITH CUSHIONING DEVICES

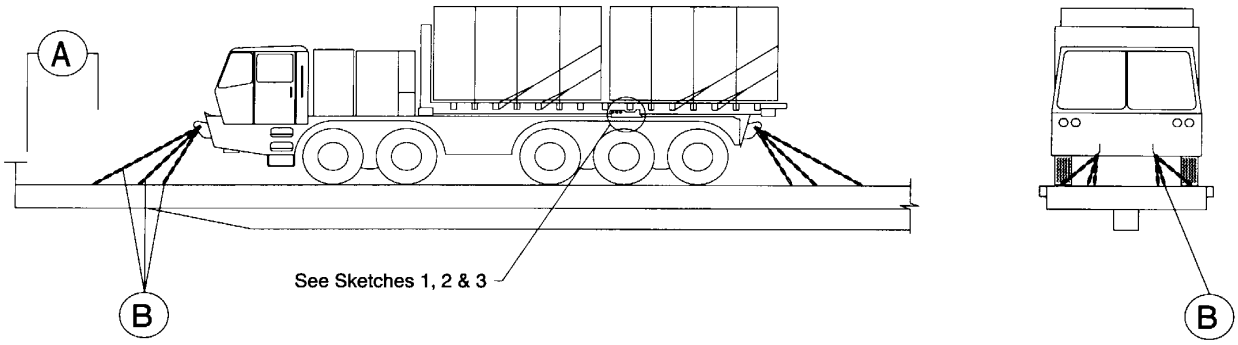

TRUCK WITH PALLETIZED LOAD SYSTEM

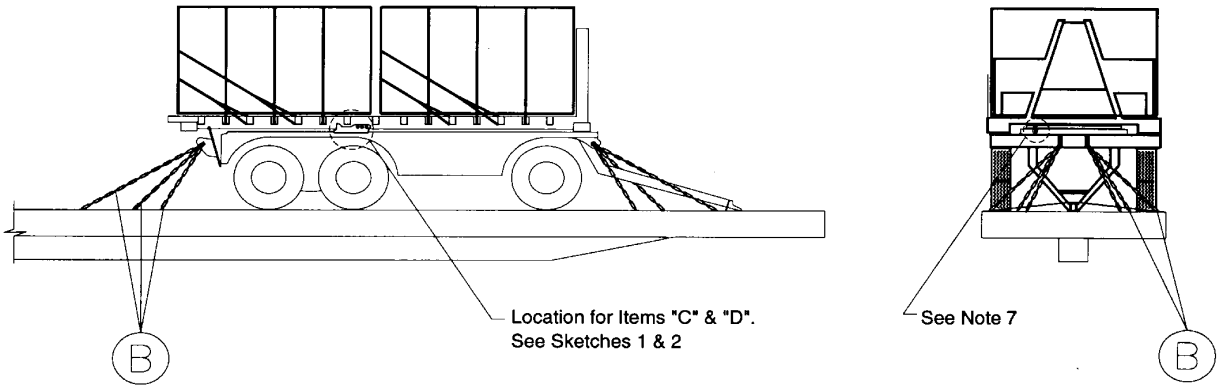

TRAILER WITH PALLETIZED LOAD SYSTEM

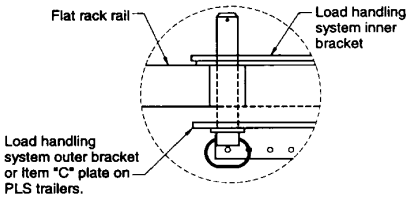

SKETCH 1

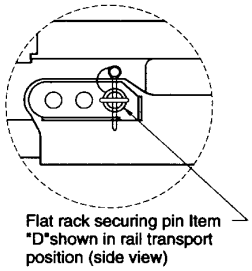

SKETCH 2

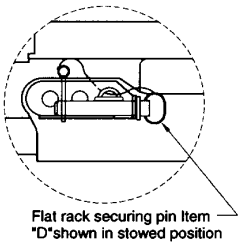

SKETCH 3